feather & black

CANTERBURY Standard Bedstead SuperKing

IMPORTANT READ CAREFULLY - RETAIN FOR FUTURE REFERENCE

- **Read all instructions before assembly. KEEP INSTRUCTIONS FOR FUTURE USE**
- Save all packing materials until assembly is complete to avoid accidentally discarding fittings
- All assembly fastenings should always be tightened properly and that care should be taken that no fittings are loose
- To clean, slightly moisten cloth with water and wipe surfaces. A damp cloth holds dust and prevents damage. Repeat with a dry, soft, lint-free cloth
- Do not use abrasives or cleaning products which may contain ammonia or solvents
- Once bed is assembled, do not sit, stand or apply weight directly to slats unless mattress in place.

TOOLS REQUIRED:

- Please use Spanner and Allen key

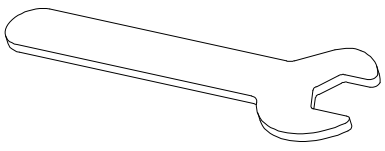

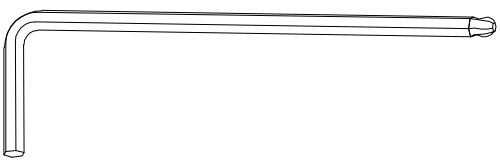

	PARTS	QTY
A	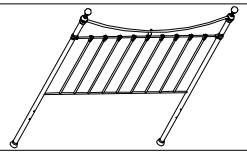	1PC
B	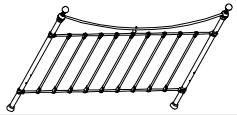	1PC
C		2PCS
D		1PC
E		2PCS
F		26PCS
G	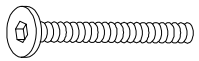 M6x63mm	2PCS
H	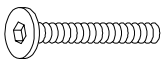 M6x38mm	4PCS
I	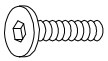 M6x25mm	8PCS
J		6PCS
K	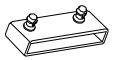	26PCS
L	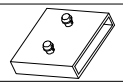	13PCS
M	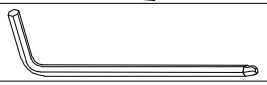	1PC
N		1PC
O	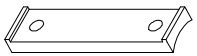	4PCS

1

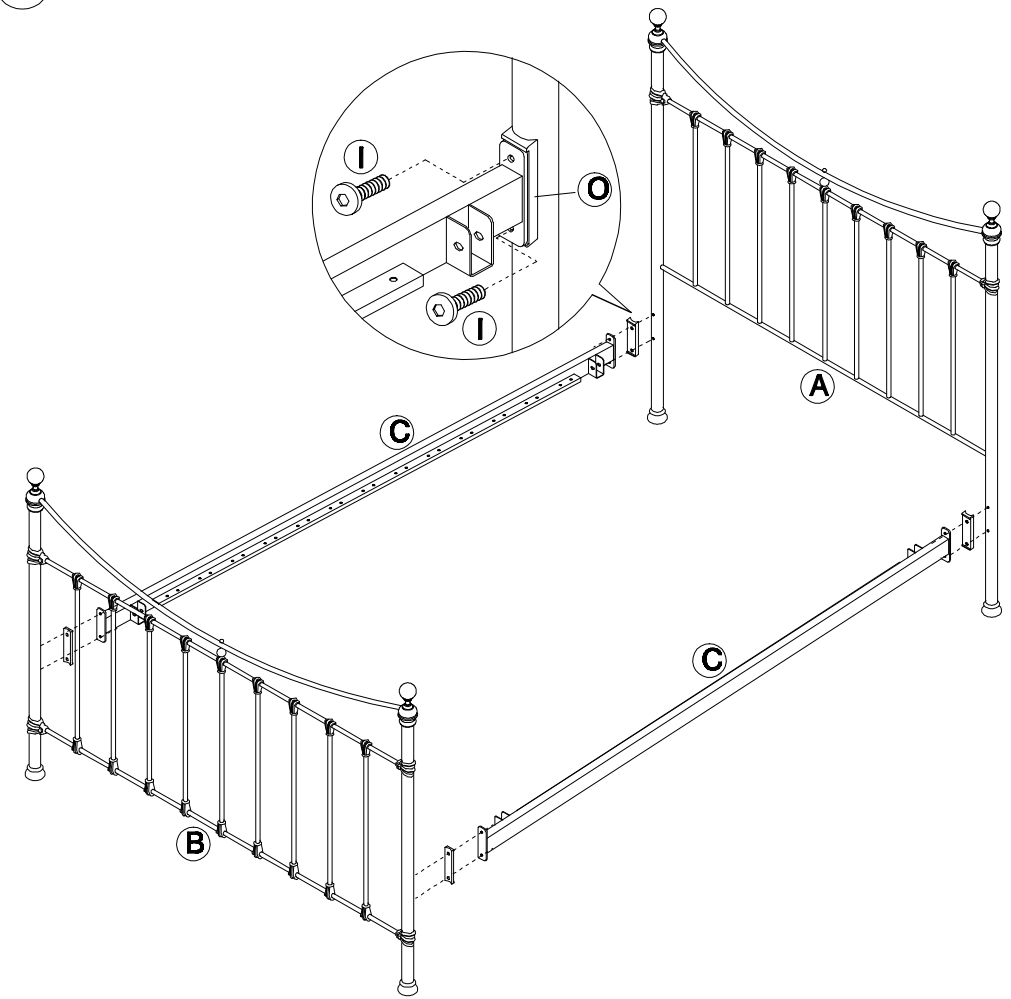

2

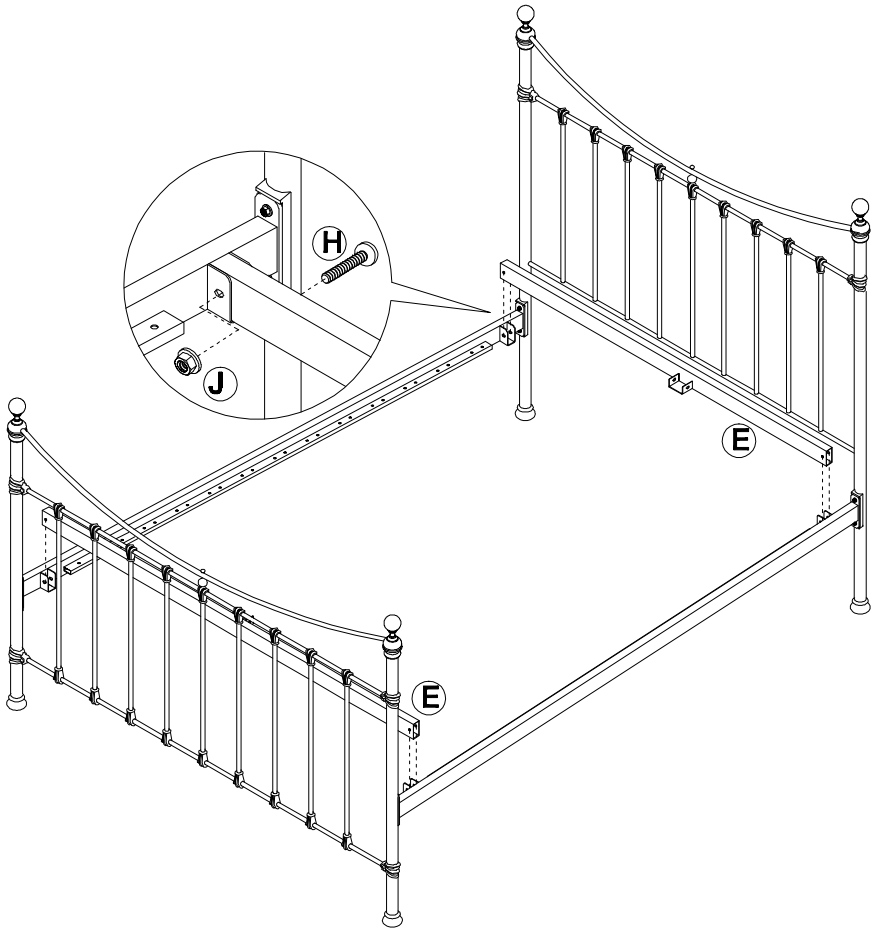

3

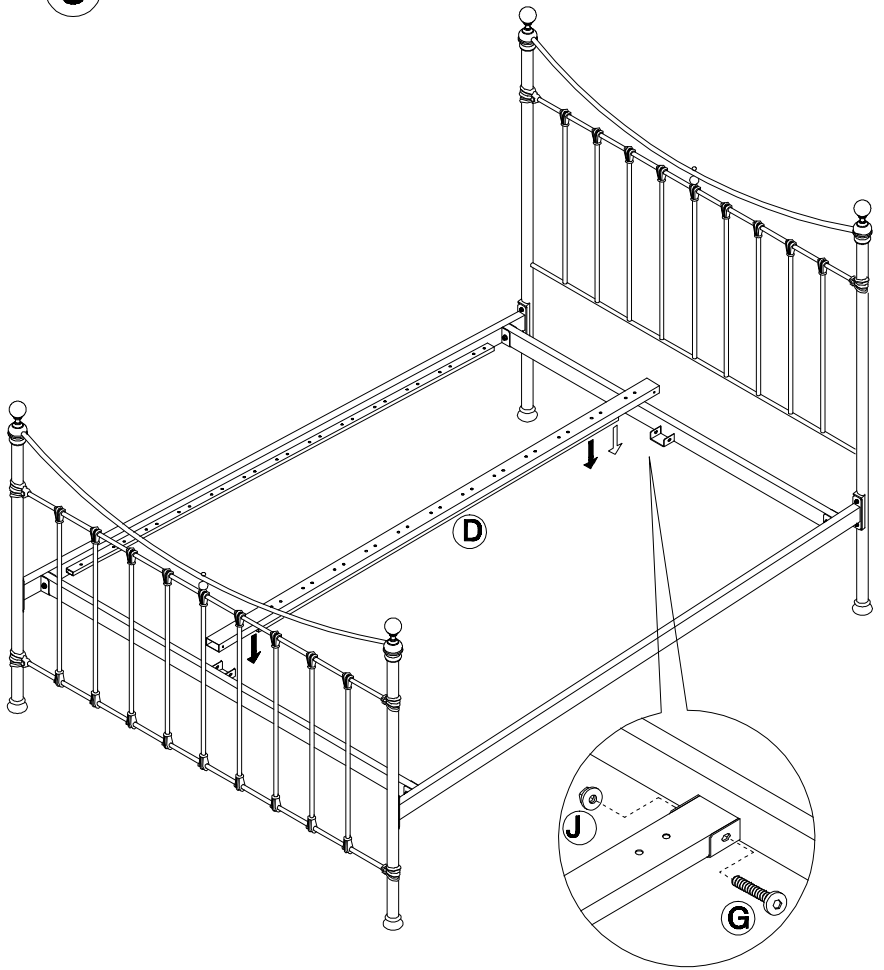
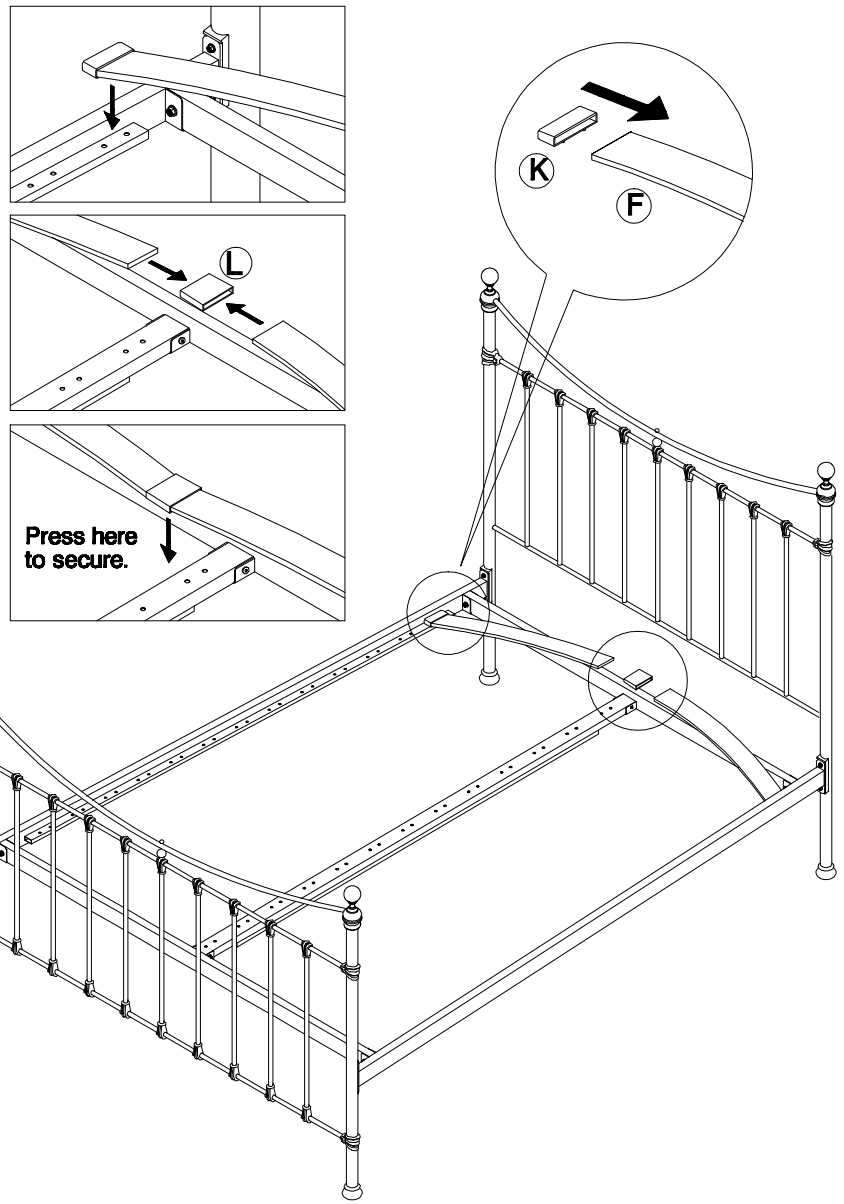
4