feather&black

Aureum Grande 3 Drawer Chest
Assembly Guide

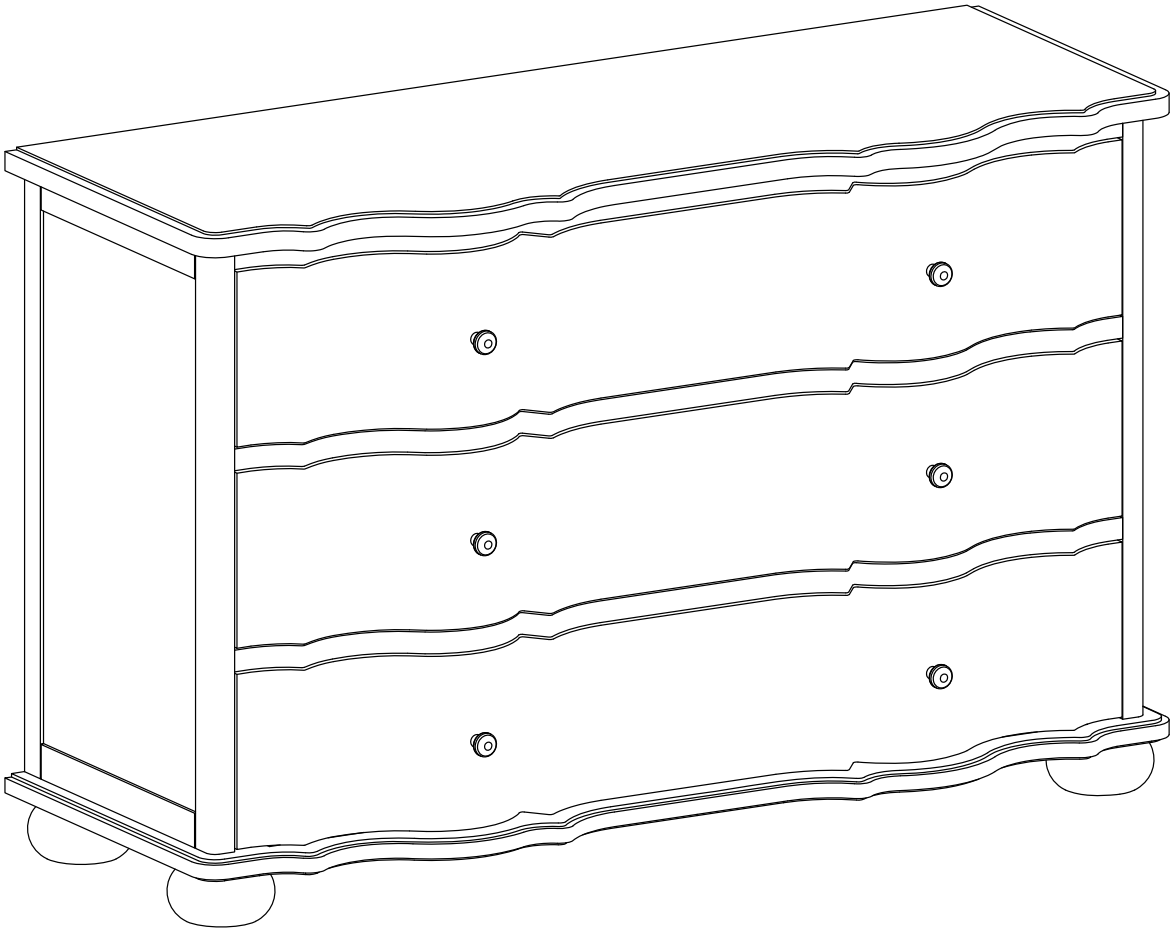

Welcome to Feather & Black

Since 2004, we've been dedicated to creating beautifully crafted bedroom furniture that's made to last. We believe your home is a reflection of you, that's why every piece we create is thoughtfully designed and carefully finished.

We hope your new addition feels right at home. If you need anything at all, our team is here to help – simply call 01494 415399 (option 2), email customerservices@featherandblack.com, or chat to us live at featherandblack.com.

We love seeing our designs styled in real homes – so if you're happy to share, tag us on Instagram @featherandblack and use #featherandblack.

From our home to yours, thank you for choosing furniture that's made to be lived in and loved for life.

The Feather & Black Team

Please retain these assembly instructions for future use

feather&black

Aureum Grande 3 Drawer Chest

Before You Start

Thank you for purchasing this Aureum Grande 3 Drawer Chest.

Please read these instructions fully prior to assembly to familiarise yourself with the various stages of construction. Carefully open all packs supplied and check the contents against the parts and fittings check list.

Do not destroy any of the packaging until you are certain that you have all the necessary parts for the assembly.

This item is heavy once assembled. Please try to assemble the item as close as possible to the point of use. Take care when moving the item to avoid personal injury or damage to the product and always lift rather than drag.

There are small components used in the construction of this furniture as well as plastic packaging, these should be kept away from young children whilst assembling.

Product Safety

All assembly fastenings should always be tightened properly, and care should be taken to ensure that no fittings are loose.

Periodically check and ensure that all components are in their proper position, free from damage, and that all connectors are tight.

Please note depending on the lighting, positioning and surroundings of your room,the shade of the colour can sometimes appear slightly different. Over a period of time the colour might lighten or fade slightly due to light exposure.

Product Care

To clean, slightly moisten cloth with water and wipe surfaces. A damp cloth holds dust and prevents damage. repeat with a dry, soft, lint-free cloth. Do not use abrasives or cleaning products which may contain ammonia or solvents.

Number of people required to assemble

Two people to assemble the product and two people to lift in to position.

Time to assemble

(15 min)

Necessary tools

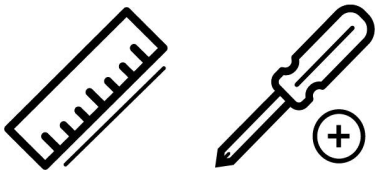

Anti-tip safety kit

We recommend using the supplied kit to attach all draws and wardrobes to the wall to avoid any risk of tipping in use.

Please ensure the correct wall fixing for your wall (not supplied).

feather&black

Aureum Grande 3 Drawer Chest

Components supplied (not actual size)

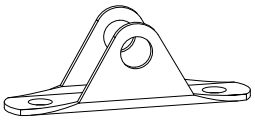

Ref: a

Quantity: 4

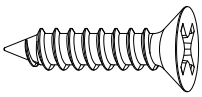

Ref: b

M3.5*16

Quantity: 4

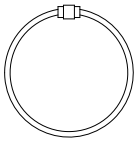

Ref: c

Quantity: 2

Tools not supplied (not actual size)

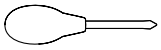

Ref: d

Quantity: 1

feather&black

Aureum Grande 3 Drawer Chest

1.

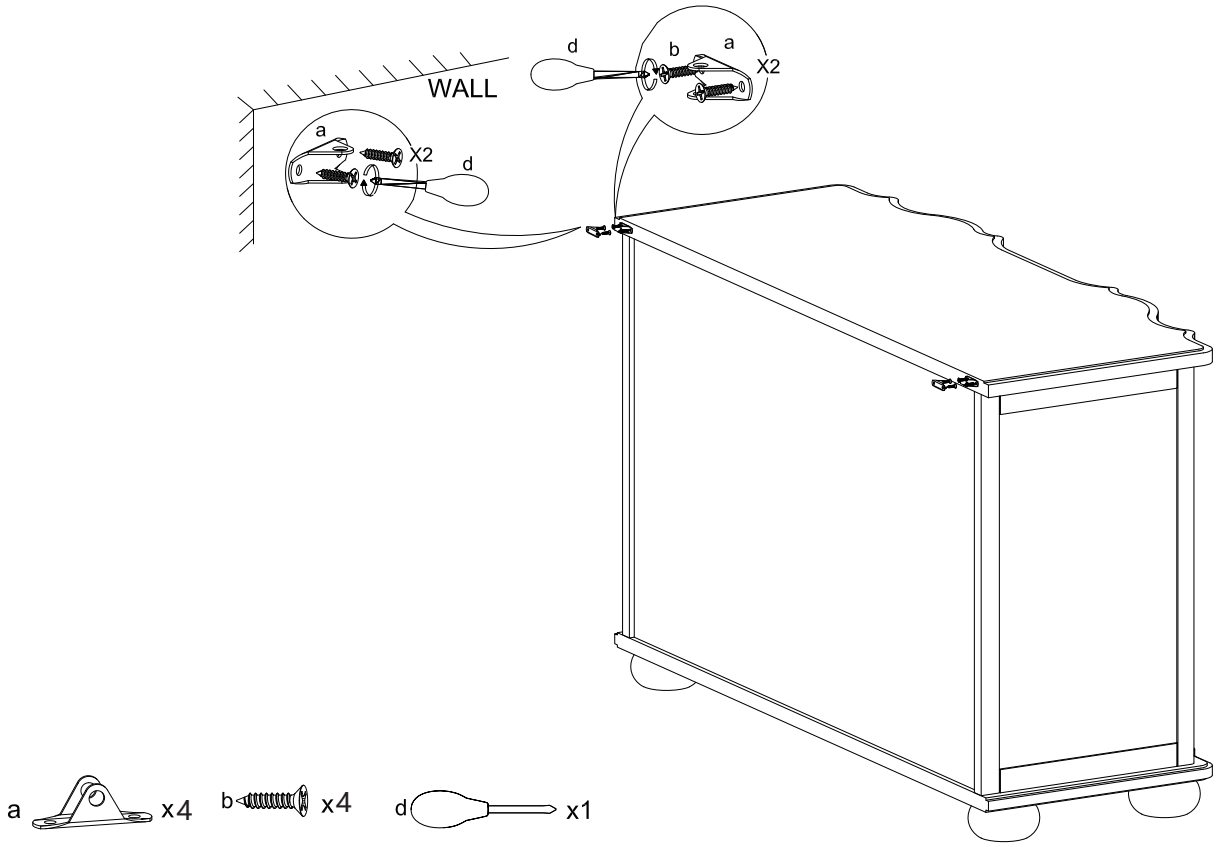

2.

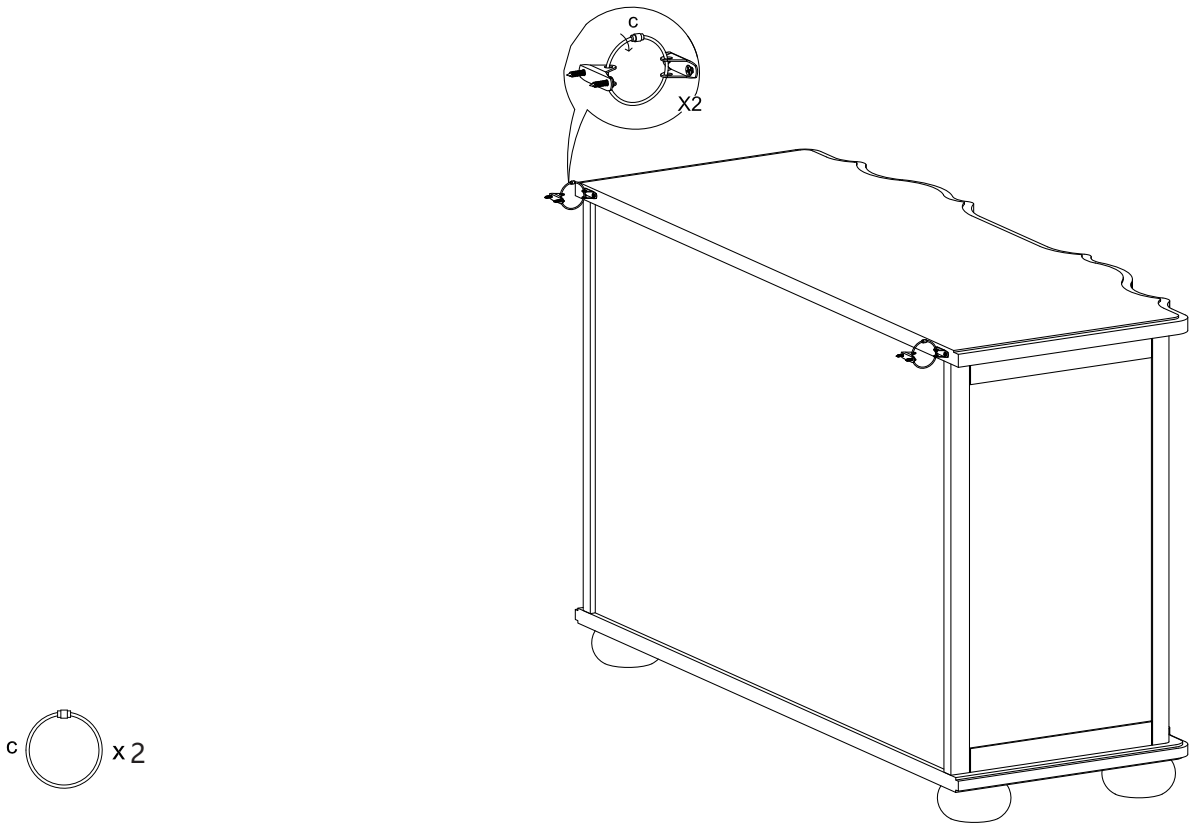

Aureum Grande 3 Drawer Chest

3.

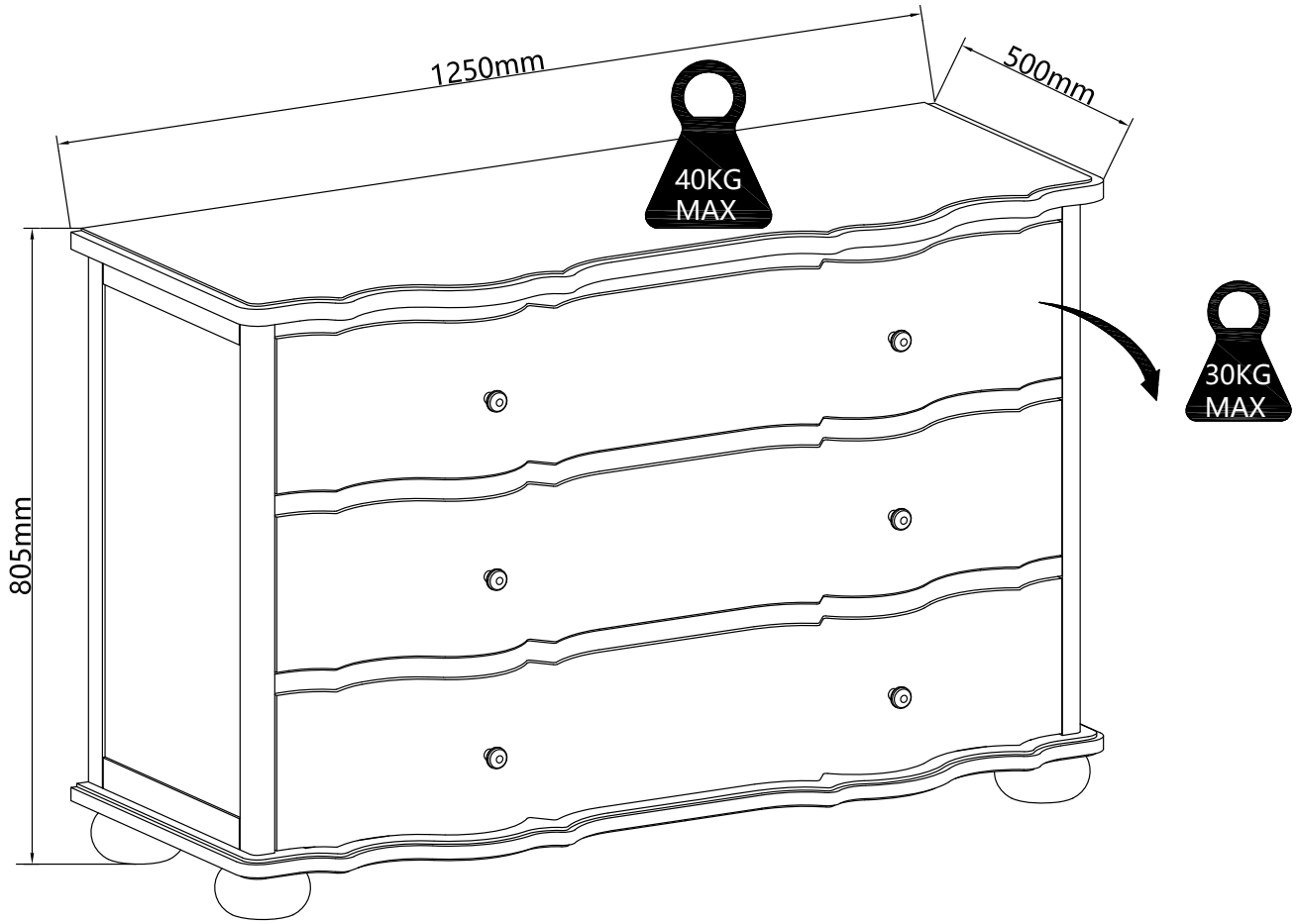

feather&black

featherandblack.com